When replacing the chassis block please ensure that the extensions of the Bogie Drive Shaft align with the corresponding slot in the Motor Universal Joint Cup *(shown pink in **Fig.14** below)*.

The sphere at the end of the drive shaft must also be aligned to the cylindrical recess in the joint cup to allow them to be slotted together.

fig.14

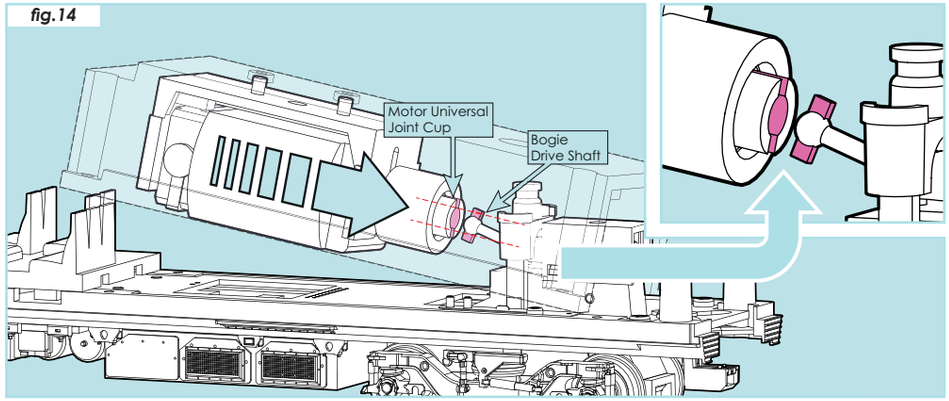

5. DCC Decoder *- Fitting a 21 Pin DCC Decoder*

Digital Command Control (DCC) allows for greater functionality and control over the models on your layout: such as the simultaneous control of speed & direction of multiple Locomotives and enables the use of DCC controlled track, points and other DCC Decoder fitted accessories. DCC also allows the addition of DCC Sound which brings a whole new level of realism to your model railway.

fig.15

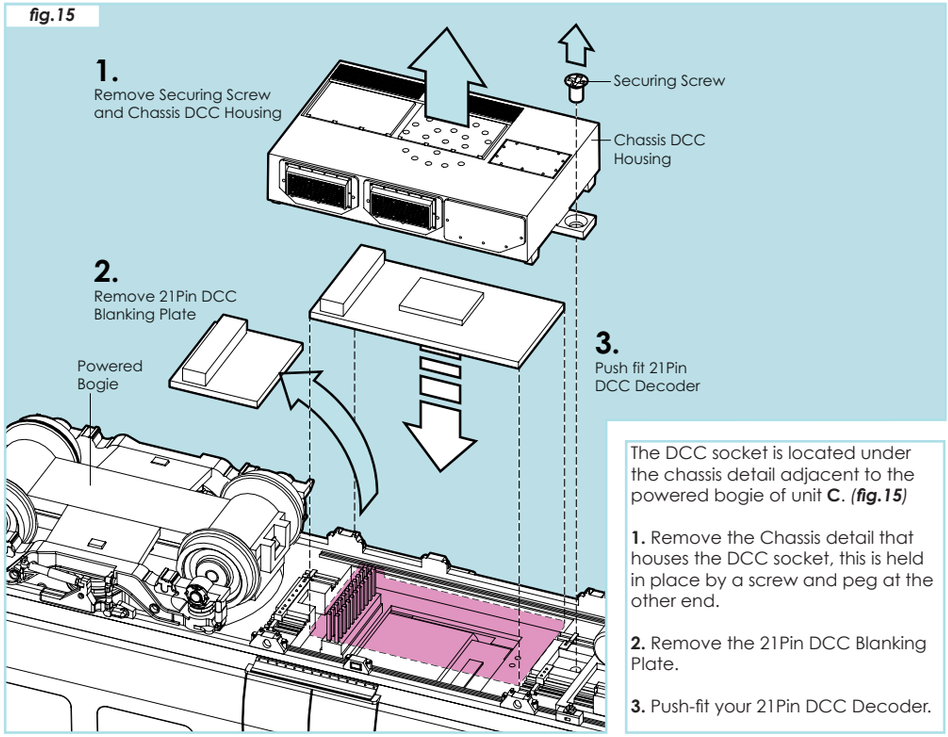

The DCC socket is located under the chassis detail adjacent to the powered bogie of unit **C**. ***(fig.15)***

1. Remove the Chassis detail that houses the DCC socket, this is held in place by a screw and peg at the other end.

2. Remove the 21Pin DCC Blanking Plate.

3. Push-fit your 21Pin DCC Decoder.

6. DCC Sound *- Installing DCC Sound*

The following equipment is required for DCC Sound.

- 1 x 21Pin DCC Sound Decoder (pre-programmed with the relevant sound file of your choice).
- 1 x 23mm Diameter Speaker.
- 2 lengths of suitable wire to connect the speaker to the PCB Board.

Please note: It's recommended that the DCC Decoder and Speaker are both from the same manufacturer and the speaker specifications are compatible with the decoder. Please consult your retailer for advice.

1. Remove the Chassis detail that houses the DCC socket and 21Pin Blanking Plate, as shown previously in ***fig.15***.

2. Secure your 23mm Diameter speaker to the inside of the Chassis detail using a thin bead of PVA glue ***(fig.16)***.

fig.16

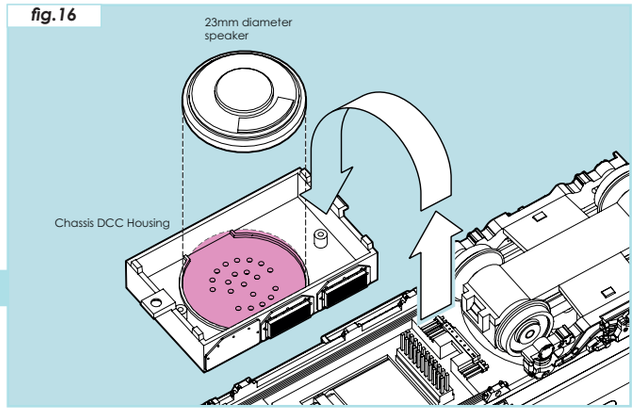

fig.17

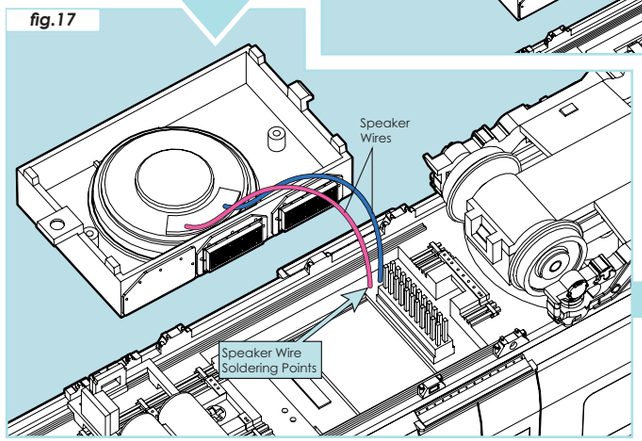

3. Carefully solder the speaker wires to the two soldering points adjacent to the DCC socket pins ***(fig.17)***.

4. Push fit your 21Pin DCC Sound Decoder and replace the DCC Chassis Housing ***(fig.18)***.

fig.18