Class 90 Electric Locomotive
Owner's Information

Welcome

Many thanks for purchasing one of our **Bachmann Branchline** Class 90 Electric Locomotives. A lot of care was taken producing your model and we hope you enjoy it for many years to come.

Please note: *This model has been designed to run on curves of* ***no less than 2nd Radius*** *(438mm). We recommend that you don't use anything smaller as this may result in the model derailing.*

Please note: *The working pantograph is driven by a Servo Motor,* ***a Decoder that is capable of driving Servo Motors must be used****. Damage to the servo motor will occur if a standard Decoder is used.*

1. Accessories & Features

Although our models are highly detailed and ready to run straight from the box, we also supply optional accessories to be fitted by the owner if they wish. Some of the accessories should only be fitted for static display as they may affect coupling or running quality. These parts will be labelled as such below.

Please note: *PVA based adhesive should be used for the fitting of accessories & etched plates (where applicable).*

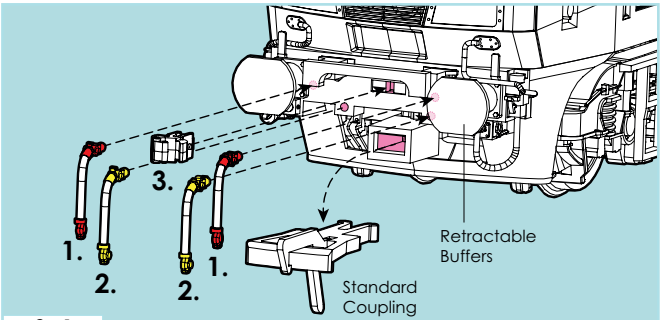

fig.1

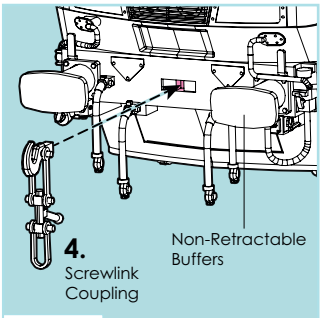

fig.2

1. Outer Pipes (Red) - Standard Coupling must be removed before fitting.
2. Inner Pipes (Yellow) - Standard Coupling must be removed before fitting.
3. Buckeye Coupling (Dummy)

4. Screw-link Coupling (Dummy) - Standard Coupling must be removed before fitting.

Retractable Buffers.

A prominent feature of the Class 90s are the retractable buffers, these were fitted to all Class 90s when new, but some were replaced at a later date, and are fitted to our models where appropriate. The retractable buffers can be identified by their flat parallel edges, when the buffers are extended the edges are horizontal ***(fig.3)*** and when retracted they're vertical ***(fig.5)***.

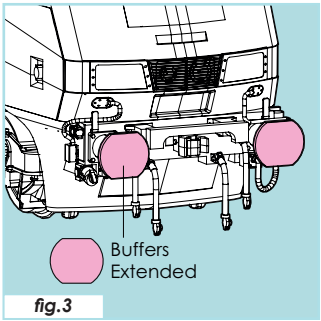

fig.3

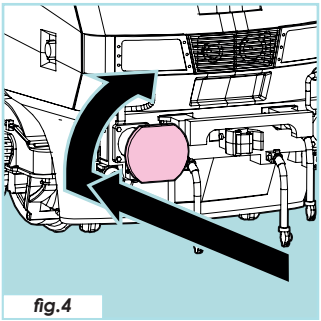

fig.4

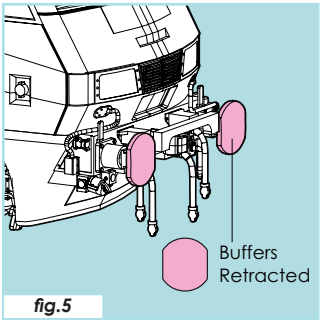

fig.5

To place the buffers into their retracted position simply push them in and rotate 90˚ clockwise ***(fig.4)***, this will lock them in position.

To return the buffers to their original position, turn them 90˚ anti-clockwise and they will spring back.